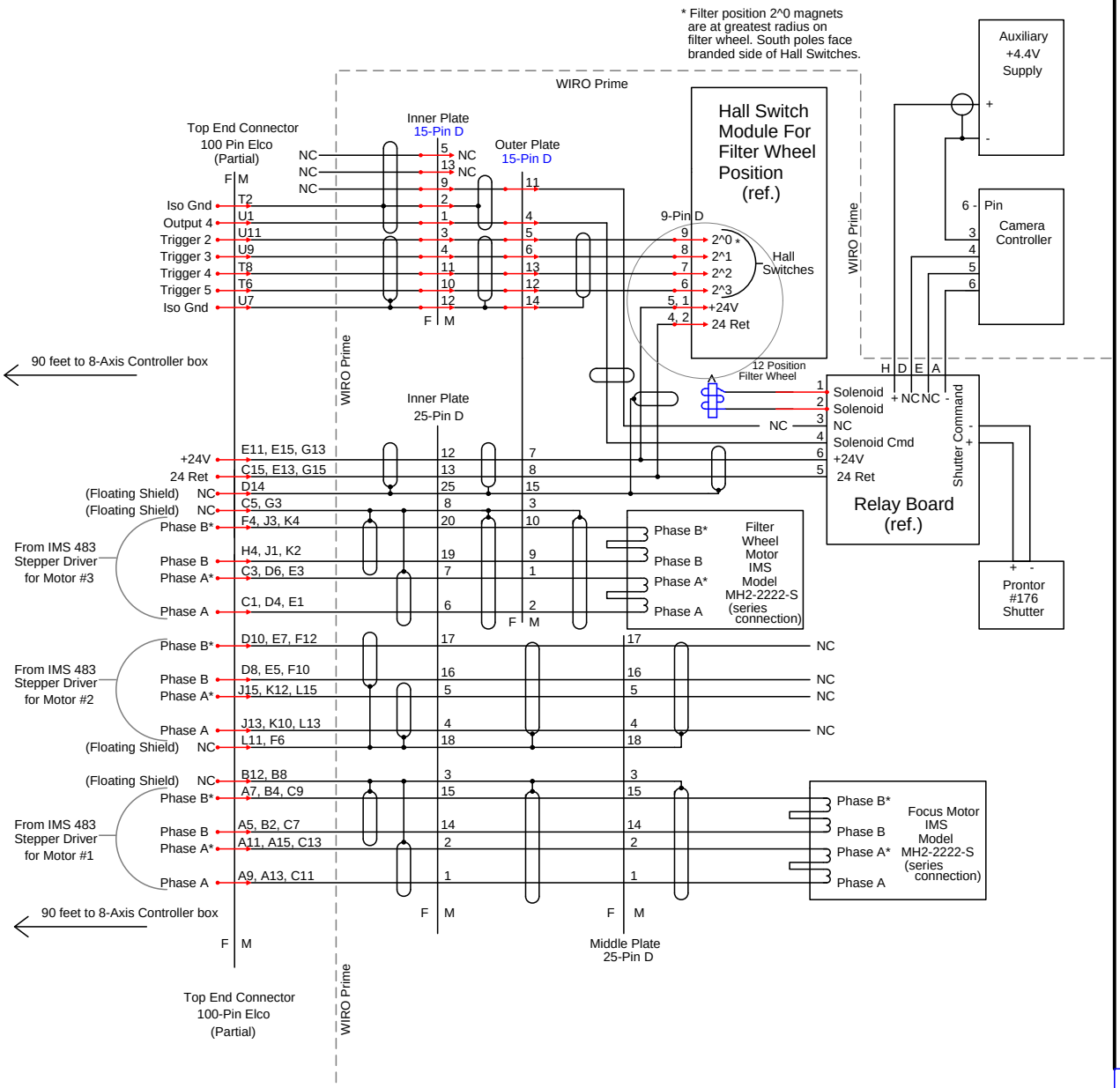

Hall Switch Module

For Filter Wheel Position

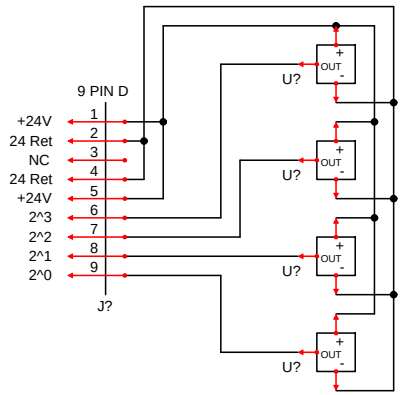

Hall Effect Sensors (4)
Micronas # HAL509
Unipolar, Low Sensitivity
0-24V Active Low Output

Wyoming Infrared Observatory		
Title: WIRO Prime with Cabling to 8-Axis Controller		
Project: WIRO Prime	File: WIROPrime.sch	Page: 1/1
Author: Josh Silvey	Date: April 26, 2006	Rev. : 1.0